Installation Instructions for Optional L-Bracket Kits Model 0969 or 1969 with E/F or FX Gearmotors

Included Items

One set of (4) four screws and (4) four lockwashers are supplied in each kit to mount the gearmotor to the bracket. The (4) holes in the base of the L-bracket are .281 wide. They accommodate .250 inch diameter fasteners (supplied by the user) to secure the bracket to the mounting surface.

The screws supplied should be tightened to 50-60 lb-in. torque.

Mounting Instructions

The L-bracket can be attached to a type FX, E or F gearmotor for mounting in any position. For permanent magnet DC motors, the preferred mounting position is with the brushes horizontal. In most applications it will be preferable to mount the gearmotor with the drive shaft in the 12 o'clock position as shown below. If the motor is mounted with the lead exit facing the mounting surface there may not be adequate clearance for the cord, bushing, or T-box between the gearmotor and the mounting surface.

To minimize L-bracket deflection, the maximum permissible overhung load is 200 lbs.

Model 0969 or 1969 L-Bracket Installed (dimensions in inches unless otherwise noted)

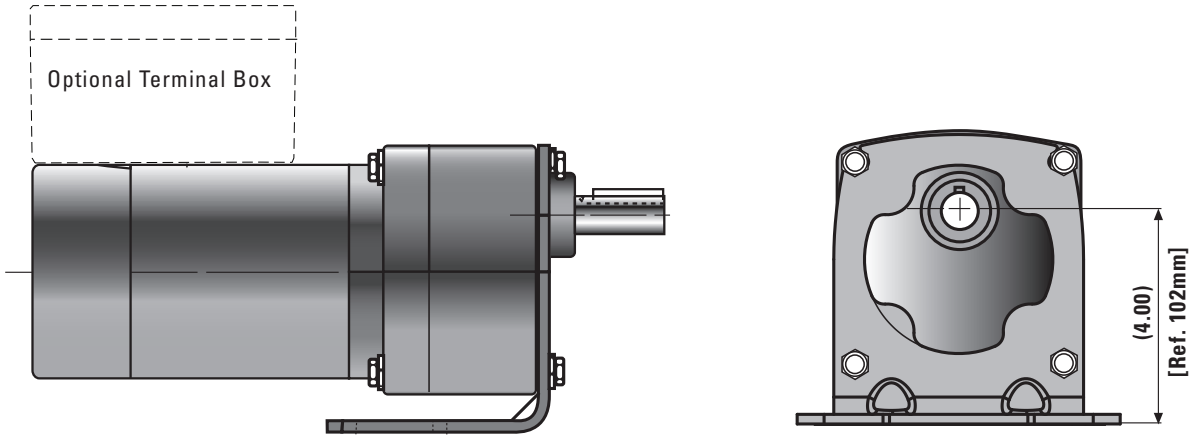
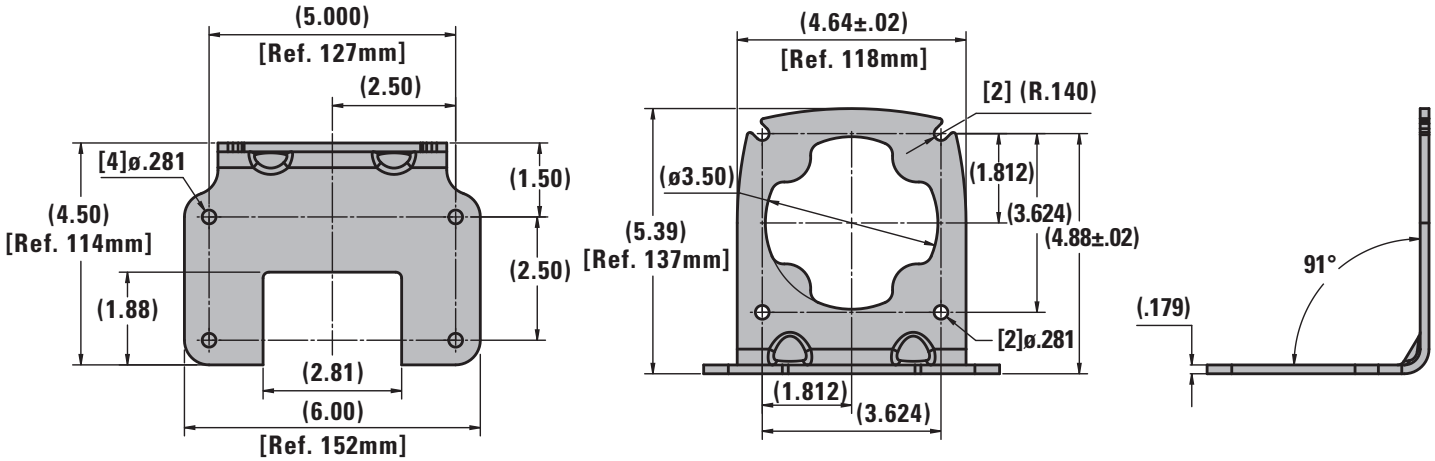
Model 0969 and 1969 L-Bracket Dimensions (inches unless otherwise noted)