BODINE ELECTRIC COMPANY	PART NO./REV: INFM0059 C
	DESCRIPTION: KIT TERMINAL BOX
	SHEET: Sheet1 / SCALE: 1:1 / C
	UNLESS OTHERWISE SPECIFIED: UNITS ARE IN INCHES [mm] TOLERANCES:.XX:±.01 .XXX:±.005 ANGLES: X°:±3° X.X°:±0.5°

NOTES:
1. MATERIAL: ALUMINUM
2. ITEMS SUPPLIED WITH TERMINAL BOX AND COVER
   GASKET CORK FOR TERMINAL BOX AND GASKET
   GASKET RUBBER FOR TERMINAL BOX AND COVER
   4X 8-32 SCREWS AND 4X #8 WASHERS (TORQUE 14-18 LB-IN)
   10-32 SCREW AND #10 WASHERS FOR GROUND LEAD
   2X 10-32 SCREWS FOR TERMINAL BOX AND RING
   BUSHING SNAP

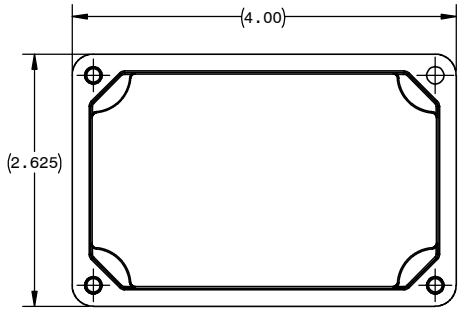

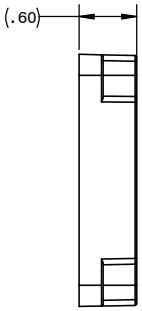

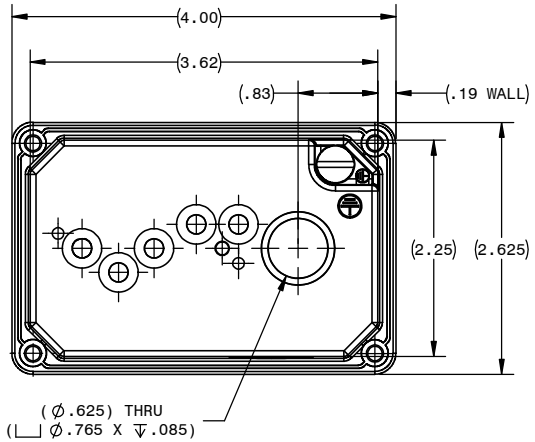

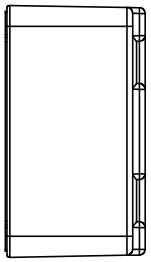

COVER

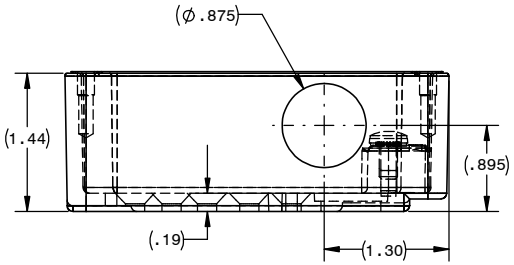

BOX

REPRESENTATIVE OF MODEL NUMBER(S):
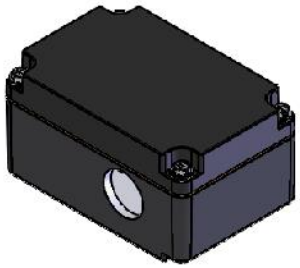
0984