BODINE ELECTRIC COMPANY	PART NO./REV: INFM0212 A
	DESCRIPTION: GEARMOTOR 42A5FEPM-FX
SHEET: 1/1	UNLESS OTHERWISE SPECIFIED:
SCALE: 3:4	UNITS ARE IN INCHES [mm]
	TOLERANCES:.XX:±.01 .XXX:±.005
C	ANGLES: X°:±3° X.X°:±0.5°

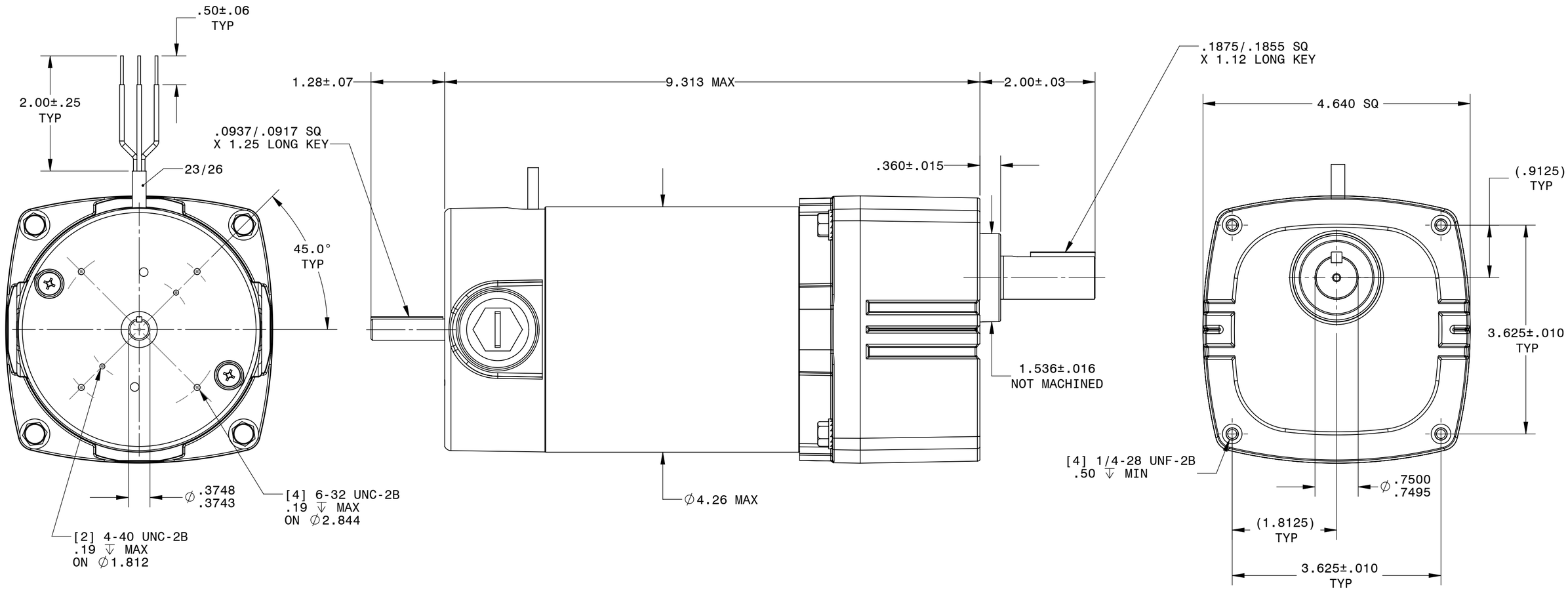

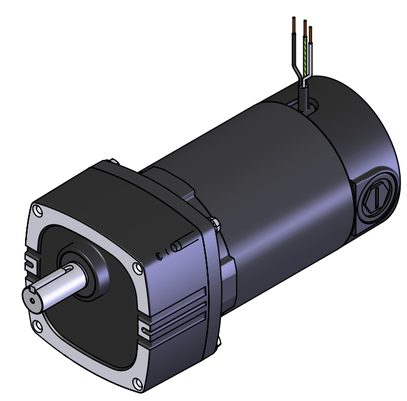

REPRESENTATIVE OF MODEL NUMBER(S):

5050 5051 5052 5053 5054 5055 5056 5057 5058 5059 5077 5078 5079