BODINE ELECTRIC COMPANY	PART NO./REV: INFM0224 B
	DESCRIPTION: GEARMOTOR 22B3BEBL-Z2
SHEET: 1/1 SCALE: 1:1 C	UNLESS OTHERWISE SPECIFIED: UNITS ARE IN INCHES [mm] TOLERANCES:.XX:±.01 .XXX:±.005 ANGLES: X°:±3° X.X°:±0.5°

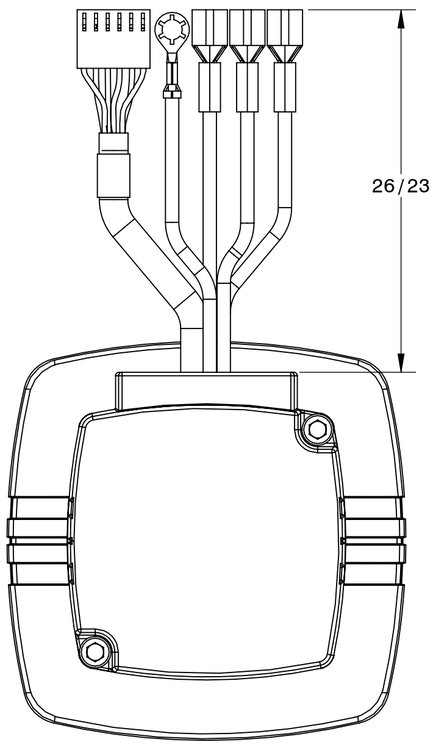

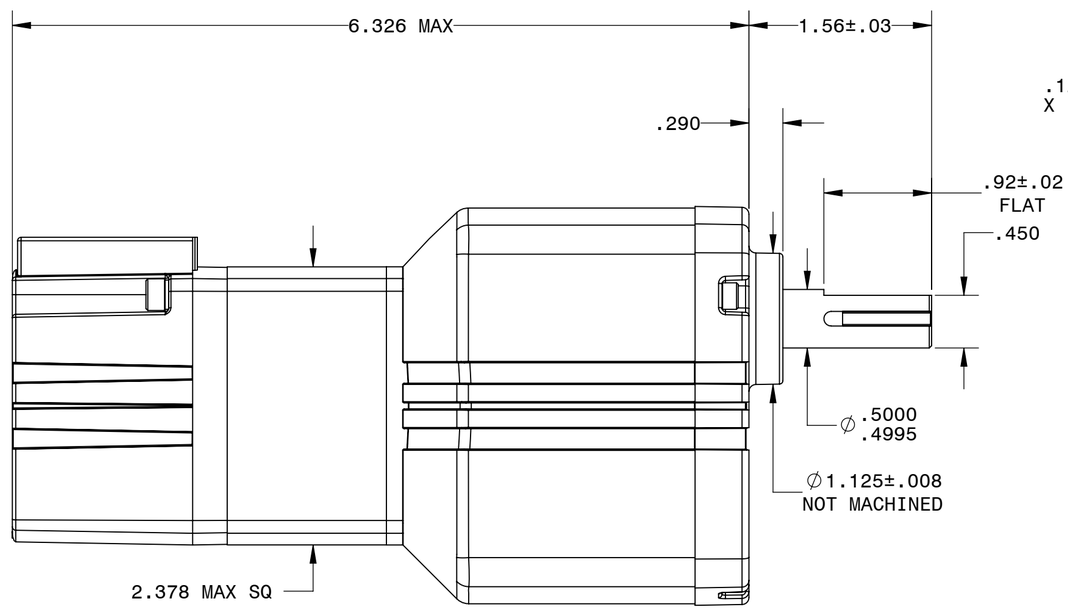

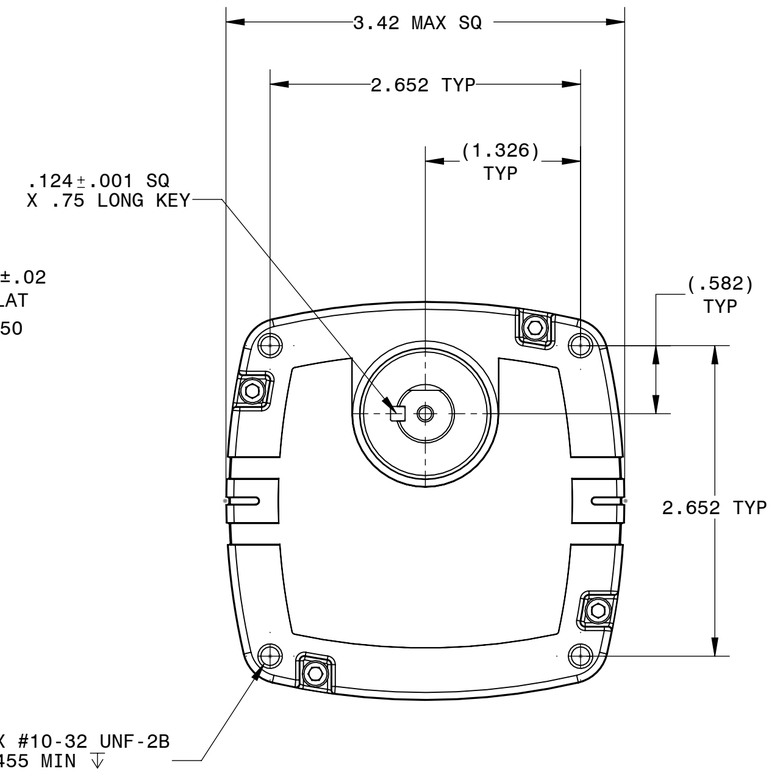

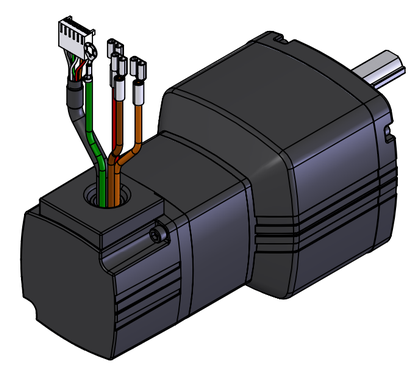

REPRESENTATIVE OF MODEL NUMBER(S):

3557 3558 3559