| BODINE ELECTRIC COMPANY | PART NO./REV: INFM0452 A |
|---|---|
| | DESCRIPTION: GEARMOTOR 33A7BEPM-WX2 -WX3 -WX4 |
| SHEET: 1/1 SCALE: 1:2 C | UNLESS OTHERWISE SPECIFIED: UNITS ARE IN INCHES [mm] TOLERANCES:.XX:±.01 .XXX:±.005 ANGLES: X°:±3° X.X°:±0.5° |

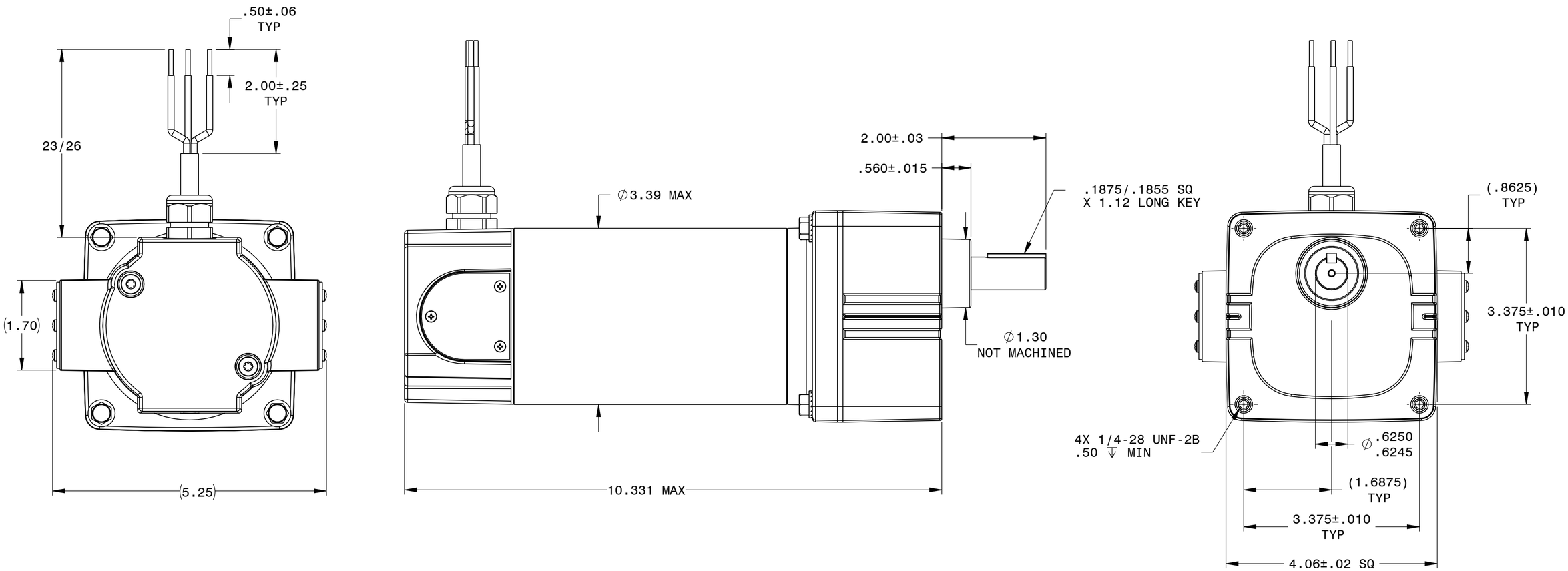


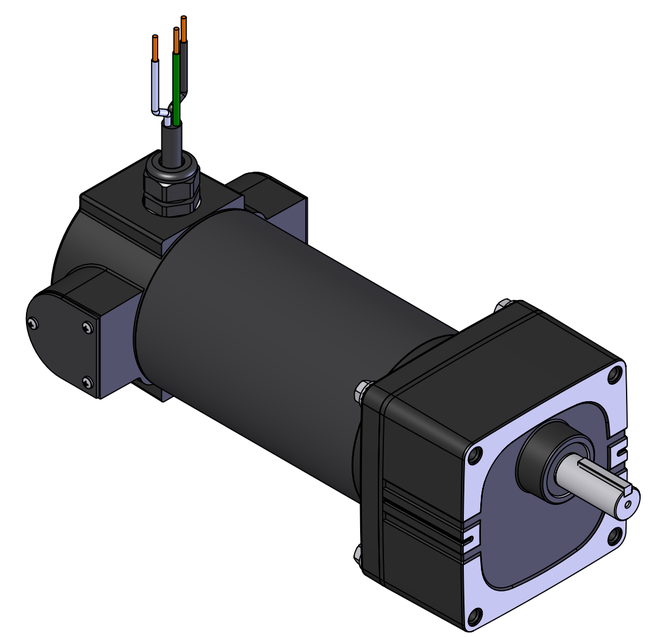

REPRESENTATIVE OF MODEL NUMBER(S):

1223 1224 1225 1226 1228 1229